LED AR111

12AR111/LED/927/S8/DIM/EC 12V 6/1FB

With an elegant new design, Philips MasterClass LED AR111 creates a brilliant visual effect. With excellent rendering of 90+ CRI and R9>50, colors stay vibrant and natural, enhancing the appeal of everything on display.

Product data

General Information	
Cap-Base	G53
Nominal lifetime	40,000 hour(s)
Switching Cycle	50,000
Lighting Technology	LED
EU RoHS compliant	Yes

Light Technical	
Color Code	927 [CCT of 2700K]
Beam Angle (Nom)	8 degree(s)
Luminous Flux	650 lm
Luminous Intensity (Nom)	8,000 cd
Color Designation	Warm White (WW)
Correlated Color Temperature (Nom)	2700 K
Luminous Efficacy (rated) (Nom)	54.00 lm/W
Color Consistency	<4
Color rendering index (CRI)	97
LLMF At End Of Nominal Lifetime (Nom)	70 %

Operating and Electrical	
Line Frequency	- Hz
Input Frequency	- Hz
Power Consumption	12 W
Lamp Current (Nom)	1,300 mA
Wattage Equivalent	50 W
Starting Time (Nom)	0.5 s
Warm-up time to 60% light	0.5 s
Power Factor (Fraction)	0.7
Voltage (Nom)	ac electronic 12 V

Temperature	
T-Case Maximum (Nom)	70 °C

Controls and Dimming	
Dimmable	Yes

Mechanical and Housing	
Bulb Finish	Clear
Bulb Material	Plastic
Bulb Shape	AR111
UL Wet/ damp/ dry location	Damp location

Approval and Application	
Suitable For Accent Lighting	Yes
Energy Consumption kWh/1000 h	- kWh
Energy Certifications	No
T20 compliant	N/A

LED AR111

Application Conditions	
can it be used in closed luminaires	No

Product Data	
Order product name	12AR111/LED/927/S8/DIM/EC 12V 6/1FB
Full product name	12AR111/LED/927/S8/DIM/EC 12V 6/1FB
Order code	929002238404

Material Nr. (12NC)	929002238404
Numerator - Quantity Per Pack	1
EAN/UPC - Product/Case	046677552442
Numerator - Packs per outer box	6
EAN/UPC - Case	50046677552447

Dimensional drawing

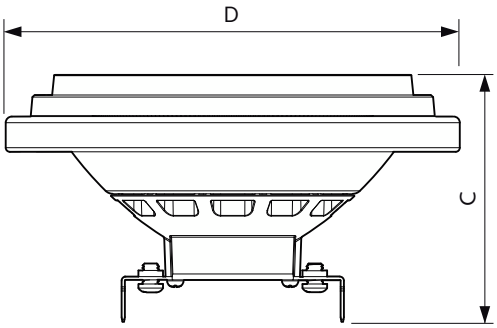

Product	D	C
12AR111/LED/927/S8/DIM/EC 12V 6/1FB	111 mm	62 mm

Photometric data

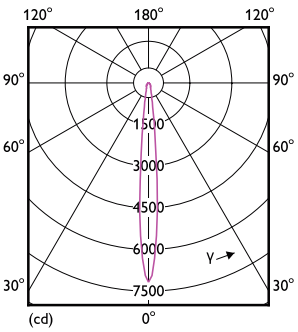

Light Distribution Diagram - 12AR111/LED/927/S8/DIM/EC 12V 6/1FB

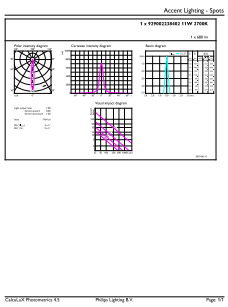

General uniform lighting - 12AR111/LED/927/S8/DIM/EC 12V 6/1FB

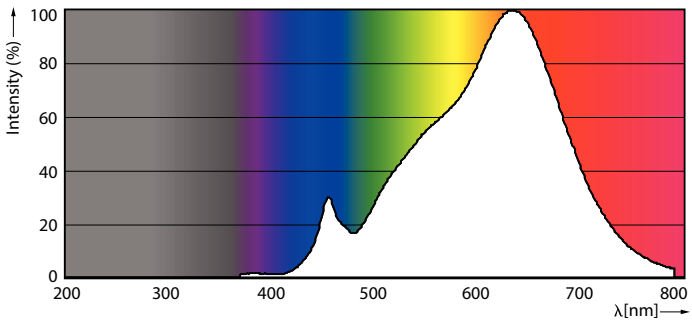

Spectral Power Distribution Colour - 12AR111/LED/927/S8/DIM/EC 12V 6/1FB

LED AR111

Lifetime

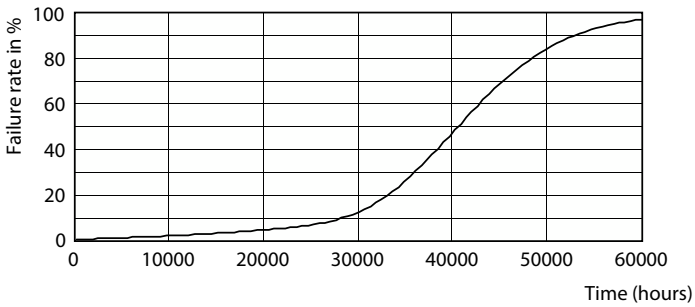

Life Expectancy Diagram - 12AR111/LED/927/S8/DIM/EC 12V 6/1FB

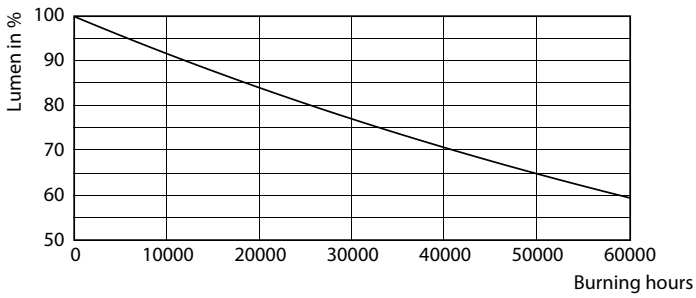

Lumen Maintenance Diagram - 12AR111/LED/927/S8/DIM/EC 12V 6/1FB

© 2024 Signify Holding All rights reserved. Signify does not give any representation or warranty as to the accuracy or completeness of the information included herein and shall not be liable for any action in reliance thereon. The information presented in this document is not intended as any commercial offer and does not form part of any quotation or contract, unless otherwise agreed by Signify. Philips and the Philips Shield Emblem are registered trademarks of Koninklijke Philips N.V.